AFC INDUSTRIES
13-16 133 PLACE
COLLEGE POINT, NY 11356
TEL: (718) 747-0237
FAX: (718) 747-0726

THE PLANS AND DRAWINGS CONTAINED HEREIN ARE PROPRIETARY AND MAY NOT BE COPIED OR REPRODUCED MECHANICALY, ELECTRONICALY OR BY ANY MEANS WITHOUT WRITTEN PERMISSION FROM AFC INDUSTRIES, INC.

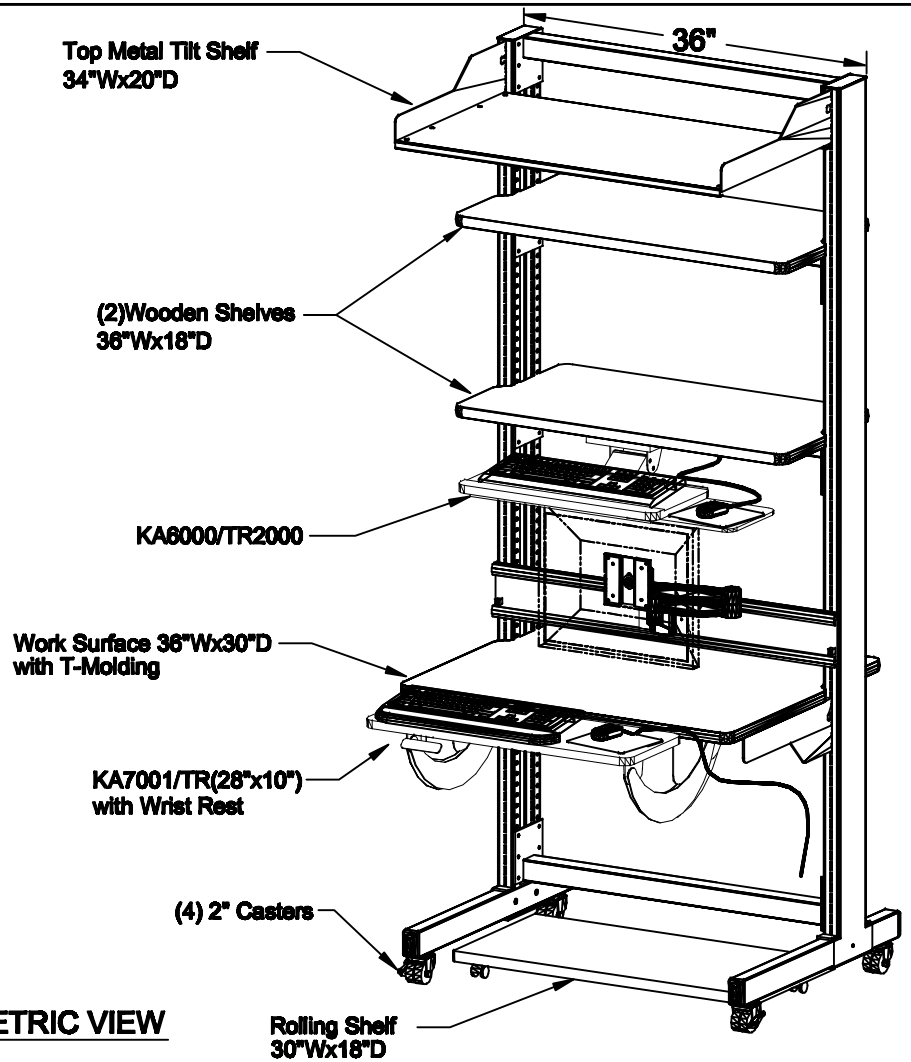

ISOMETRIC VIEW

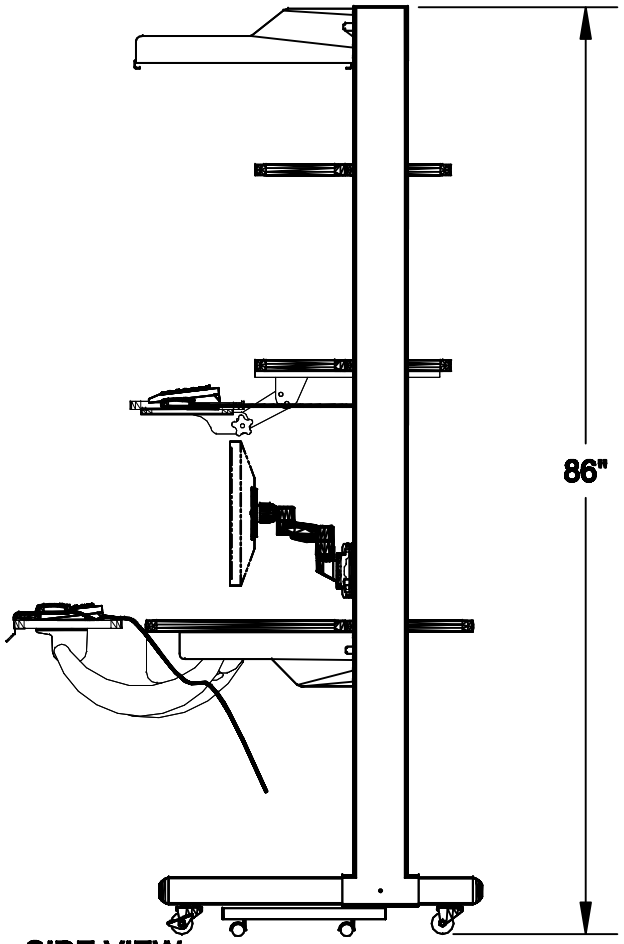

SIDE VIEW

NOTES:	MATERIAL:	DRAWN BY: PR/LV	DATE: 01-16-2017	DESCRIPTION: SR363086
		APPROVED		
	TOLERANCES UNLESS OTHERWISE SPECIFIED FRACTIONAL ±1/64 2 PLC. DEC. ±.01 3PLC. DEC. ±.001 ANGULAR FINISH	ENG:		SKU NUMBER: 772346
		MFG:		PATH: FinalAssem\SmartRack\SR36\2010
		QA:		PDF NAME: 772346_SR363086_HC(issue 12)Vol.1
		NOT TO SCALE	SHEET: 1 OF 1	REV: 1 / SIZE: A